rev:	revision text:	rev.date:	rev.by:	aprv. date:	aprv. by:
02	general simplification	2023-12-20	MicNaeb	2023-12-20	MicNaeb
03	Center mark changed	2025-07-09	SimHube	2025-07-09	MicNaeb

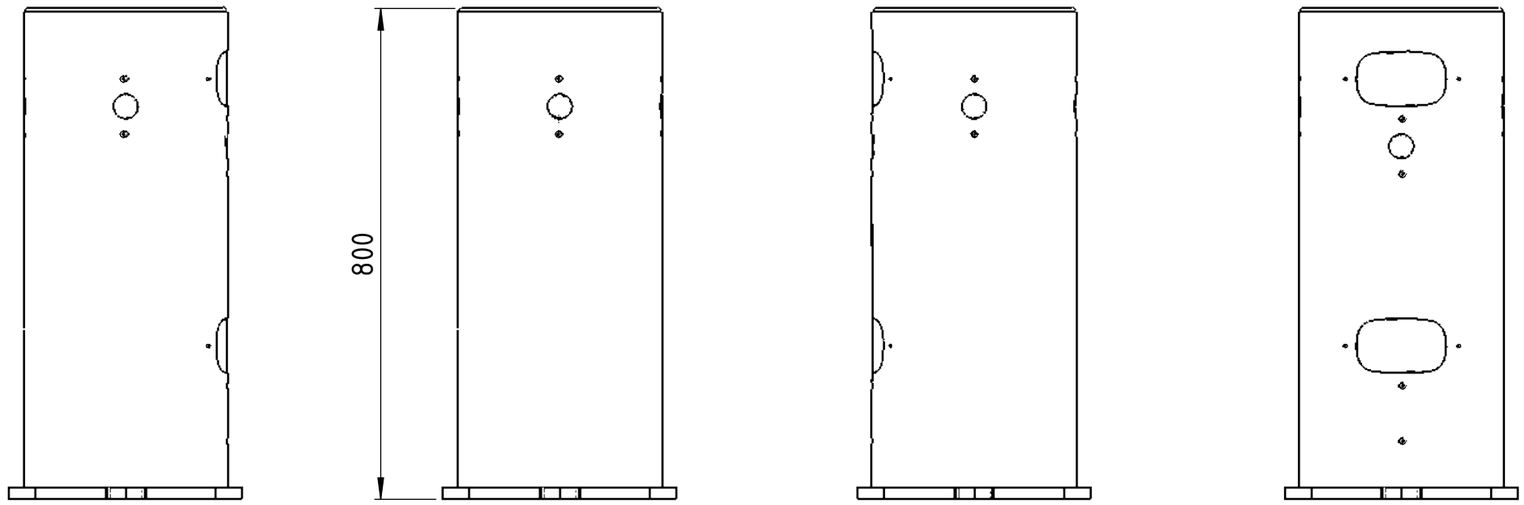

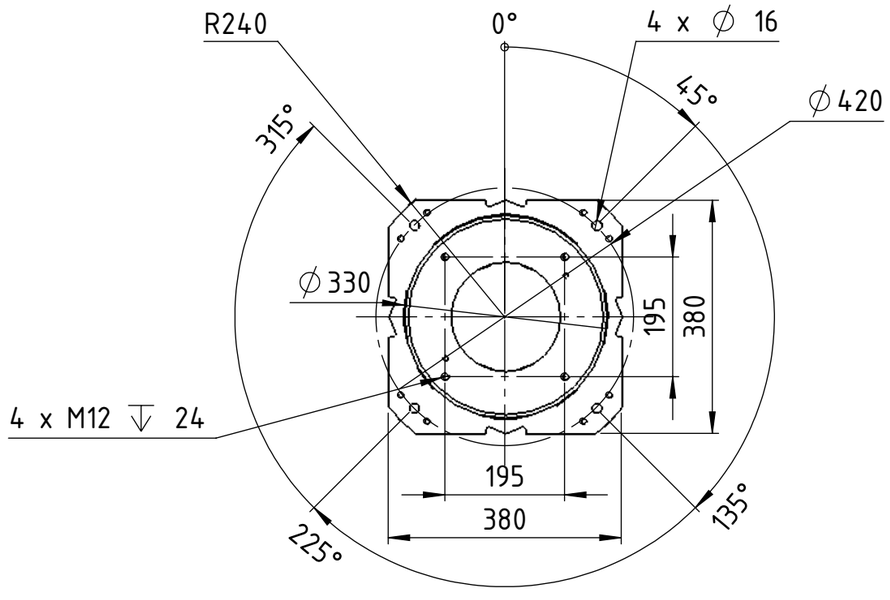

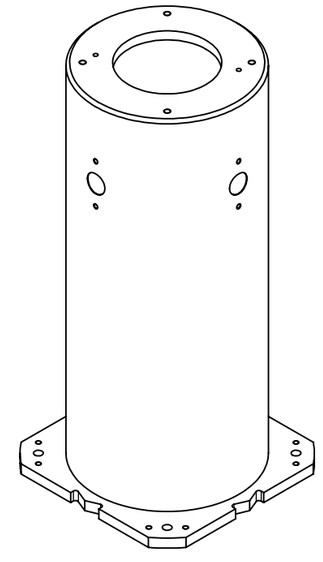

where nothing else is indicated:
tolerances: DIN ISO 2768-mH
welding: DIN EN ISO 13920-A
edges: DIN EN ISO 13715
-0,3
-0,5
+0,3

status: Released
SAP EMEA nr:
SAP AH nr: 230722
title / description: robot stand E-800

YASKAWA
www.yaskawa.eu.com

dimension: 800x380x380 mm		weight: 40,241 kg	
created:	2023-07-18	MicNaeb	
drawn:	2023-07-18	MicNaeb	sheet:
approved:	2023-07-18	RaiSeid	A3
drawing-nr.: 0001060079-100		revision: 03	1:10 4/5

CONFIDENTIAL! The reproduction, distribution and utilization of this document as well as the communication of its contents to others without express authorization is prohibited. Offenders will be held liable for the payment of damages. All rights reserved in the event of the grant of a patent, utility model or design