rev.	revision text:	rev.date:	rev.by:	aprv. date:	aprv. by:
02	general simplification	2023-12-14	RaiSand	2023-12-15	MicNaeb

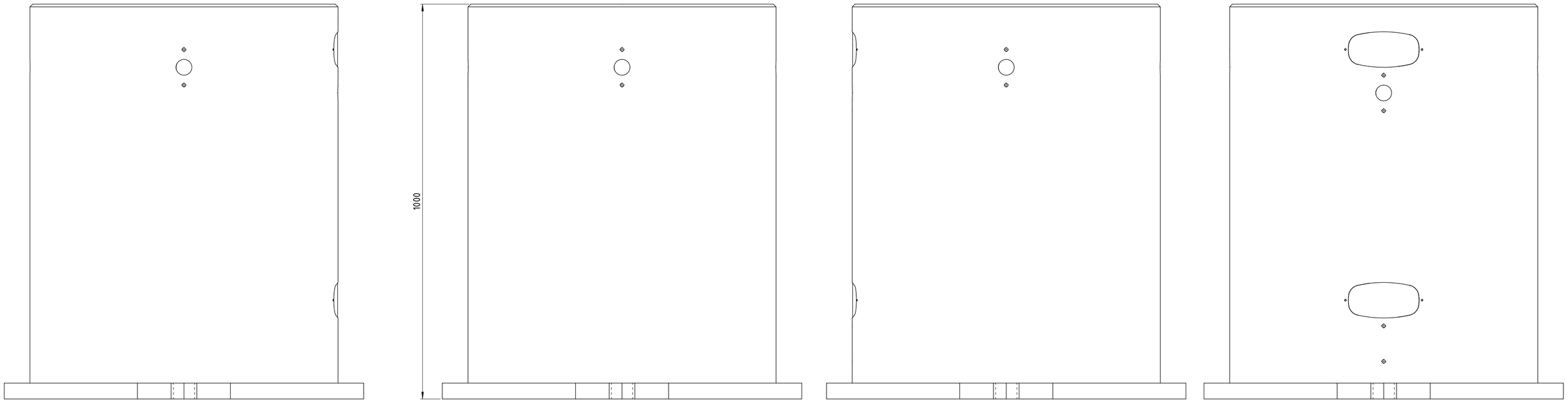

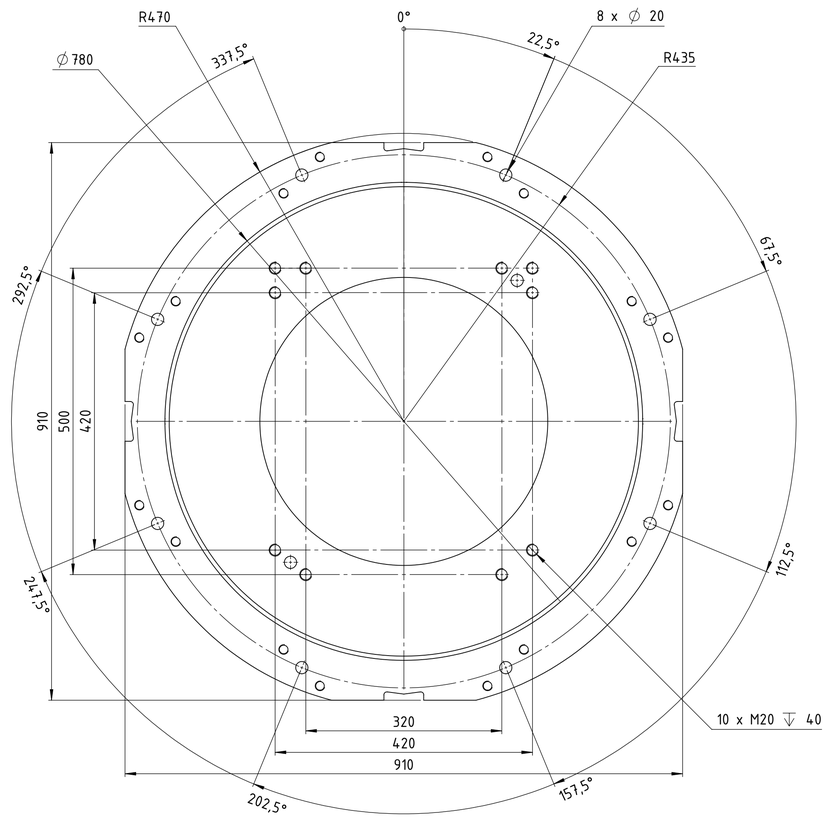

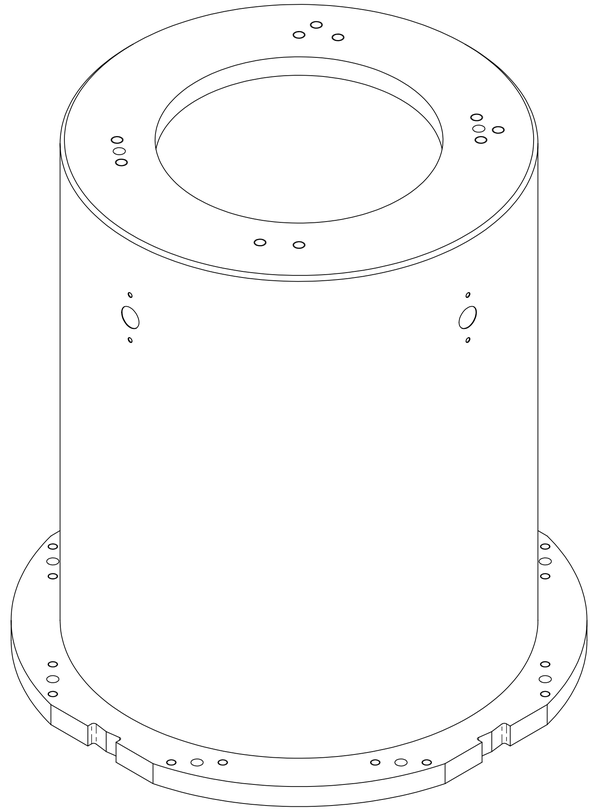

where nothing else is indicated
tolerances: DIN ISO 2768-mH
welding: DIN EN ISO 13920-A
no sharp edges

status: Released
SAP EMEA no:
SAP AH no: 230781

YASKAWA
www.yaskawa.eu.com

title / description:
robot stand
P-1000

dimension:		weight: 236,973 kg	
created:	2023-07-19	MicNaeb	
drawn:	2023-07-19	MicNaeb	sheet
approved:	2023-07-19	RaiSeid	A1
drawing-no.: 0001060256-100		revision: 02	1:5 4/5

The reproduction, distribution and utilization of this document as well as the communication of its contents to others without express authorization is prohibited. Offenders will be held liable for the payment of damages. All rights reserved in the event of the grant of a patent, utility model or design.